# REDUCED PRESSURE DETECTOR ASSEMBLY (RPDA)
## (3" – 10")

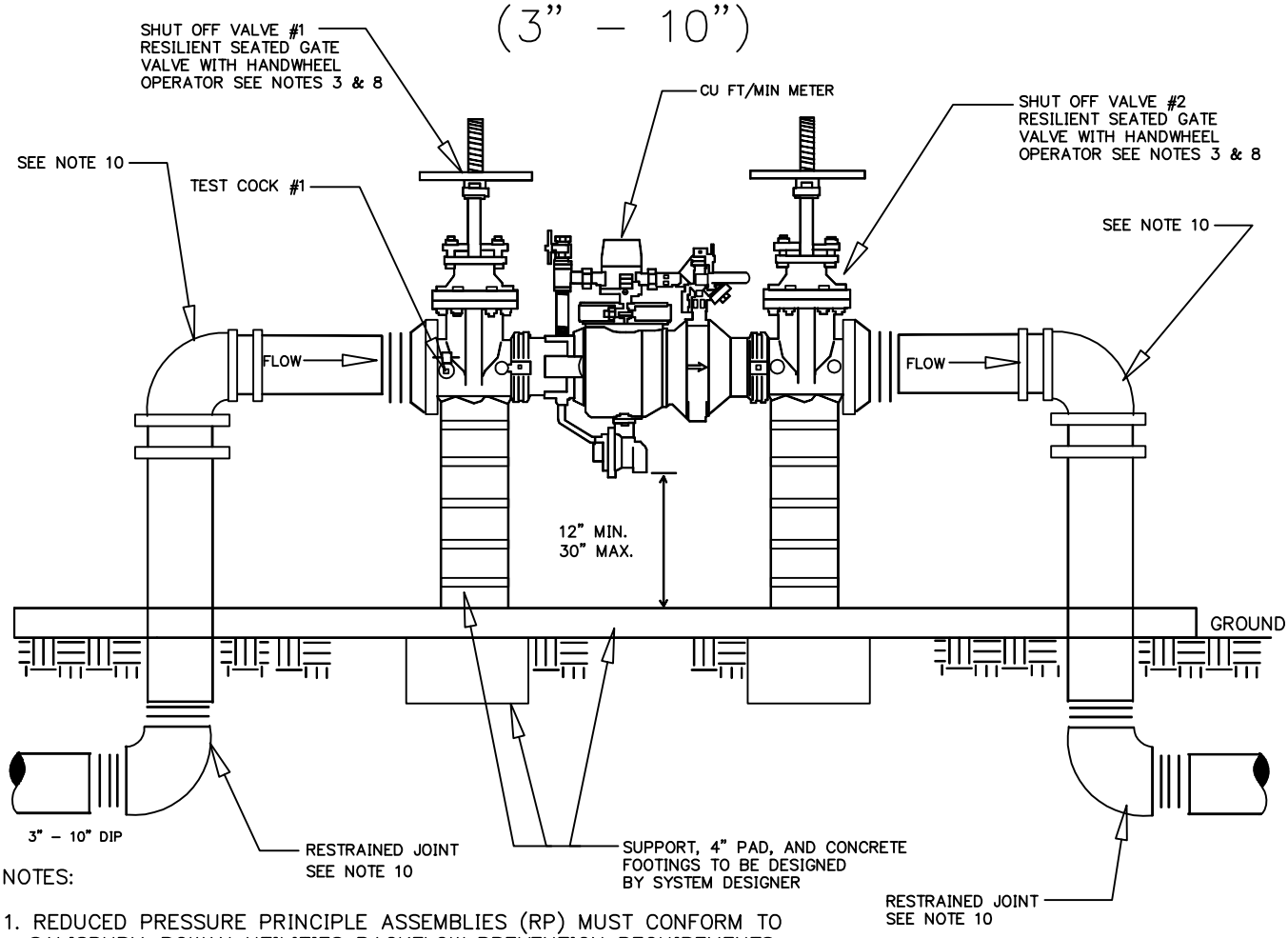


NOTES:

1. REDUCED PRESSURE PRINCIPLE ASSEMBLIES (RP) MUST CONFORM TO SALISBURY–ROWAN UTILITIES BACKFLOW PREVENTION REQUIREMENTS.
2. (BACKFLOW ASSEMBLY MUST BE INSTALLED BEFORE SERVICE LINE IS CONNECTED TO ANY OTHER PIPES, EXCEPT AS AUTHORIZED BY THE WATER PURVEYOR.) WATER LINE MUST BE EXPOSED FOR INSPECTION FROM METER TO BACKFLOW PREVENTER.
3. THE SALISBURY–ROWAN UTILITIES APPROVED 3" – 10" RP INCLUDES SHUT OFF VALVES #1 AND #2 AS PART OF THE ASSEMBLY. NO SUBSTITUTIONS SHALL BE PERMITTED.
4. TEST COCK #1 SHALL BE UPSTREAM OF SHUT OFF VALVE #1 AND IS PART OF THE APPROVED ASSEMBLY.
5. FIRE LINE BACKFLOW PREVENTION ASSEMBLY SHALL HAVE HEAT & TAMPER SWITCHES WITHIN THE PROTECTIVE ENCLOSURE.
6. NO STRAINER IS ALLOWED ON A BACKFLOW PREVENTION ASSEMBLY FOR A FIRE LINE SERVICE.
7. RP SHALL BE SUPPORTED AND SHALL NOT BLOCK RELIEF VALVE OR DRAIN PORT.
8. FIRE LINE AND COMBINATION OF FIRE AND DOMESTIC SERVICES SHALL HAVE OUTSIDE STEM AND YOKE (OS & Y) HANDWHEEL OPERATORS.
9. OUTDOOR INSTALLATION SHALL HAVE A PROTECTIVE COVERING (ASSE 1060) WITH DRAIN PORT AS SPECIFIED IN SALISBURY–ROWAN UTILITIES SPECIFICATIONS FOR INSTALLATION OF BACKFLOW PREVENTION ASSEMBLIES.
10. ALL PIPING AND FITTINGS ABOVE GROUND SHALL BE FLANGED INCLUDING RP. ALL FITTINGS BELOW GROUND MUST BE MECHANICAL JOINT WITH MEGA LUG RESTRAINTS OR APPROVED EQUAL.
11. INSIDE INSTALLATION REQUIRES A DRAIN TO ATMOSPHERE & REQUIRES APPROVAL BY SALISBURY–ROWAN UTILITIES.
12. INSIDE INSTALLATION REQUIRES AN EXTERNAL METER READING DEVICE.

| | |
|---|---|
| CITY OF SALISBURY, N.C. STANDARD DETAIL | DATE: FEBRUARY 3, 2009 |
| STANDARD DETAIL BACKFLOW PREVENTION RPDA 3" – 10" | NOT TO SCALE |
| | STANDARD BF-16 |