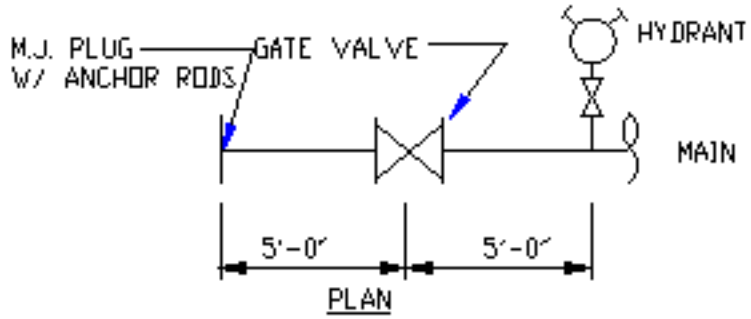

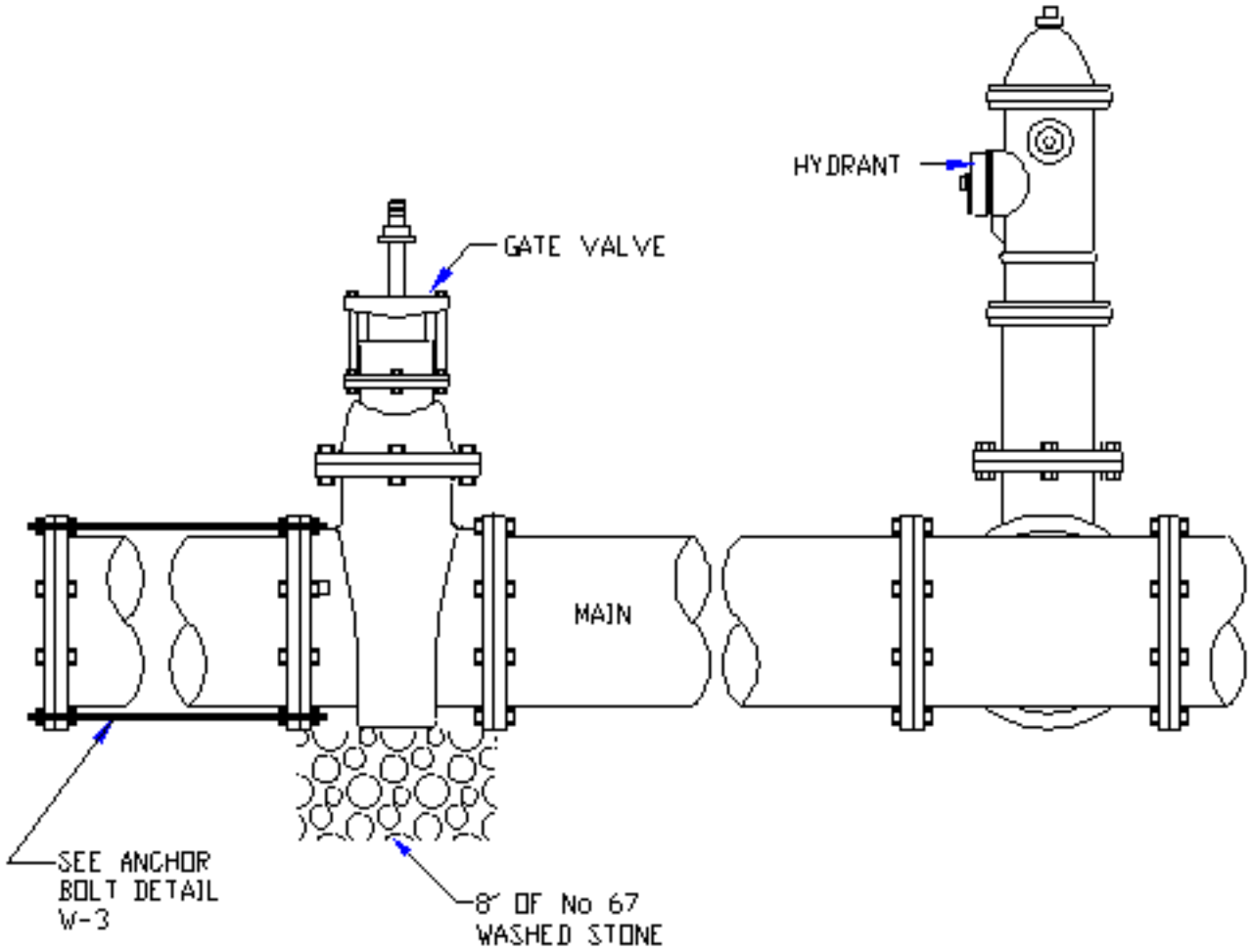

CITY OF SALISBURY, N.C. STANDARD DETAIL	DATE: JANUARY 1, 1991
WATER SYSTEMS DEAD END LINES	NOT TO SCALE
	STANDARD W-6