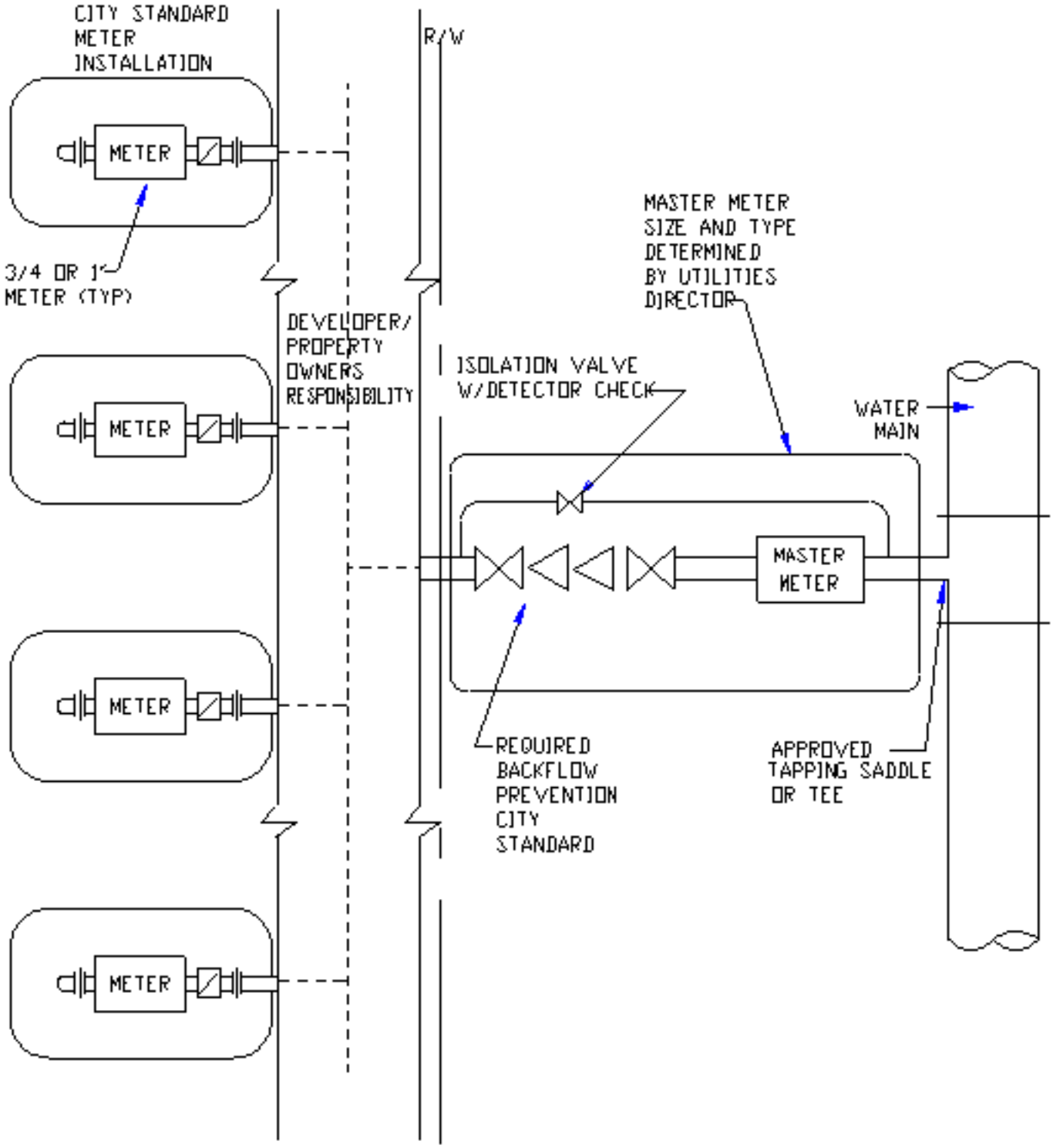

1. USE OF MULTIPLE METER ASSEMBLY SHALL BE APPROVED BY UTILITIES DIRECTOR

CITY OF SALISBURY, N.C. STANDARD DETAIL	DATE: JANUARY 1, 1991
WATER SYSTEMS MULTIPLE METER ASSEMBLY	NOT TO SCALE
	STANDARD W-11