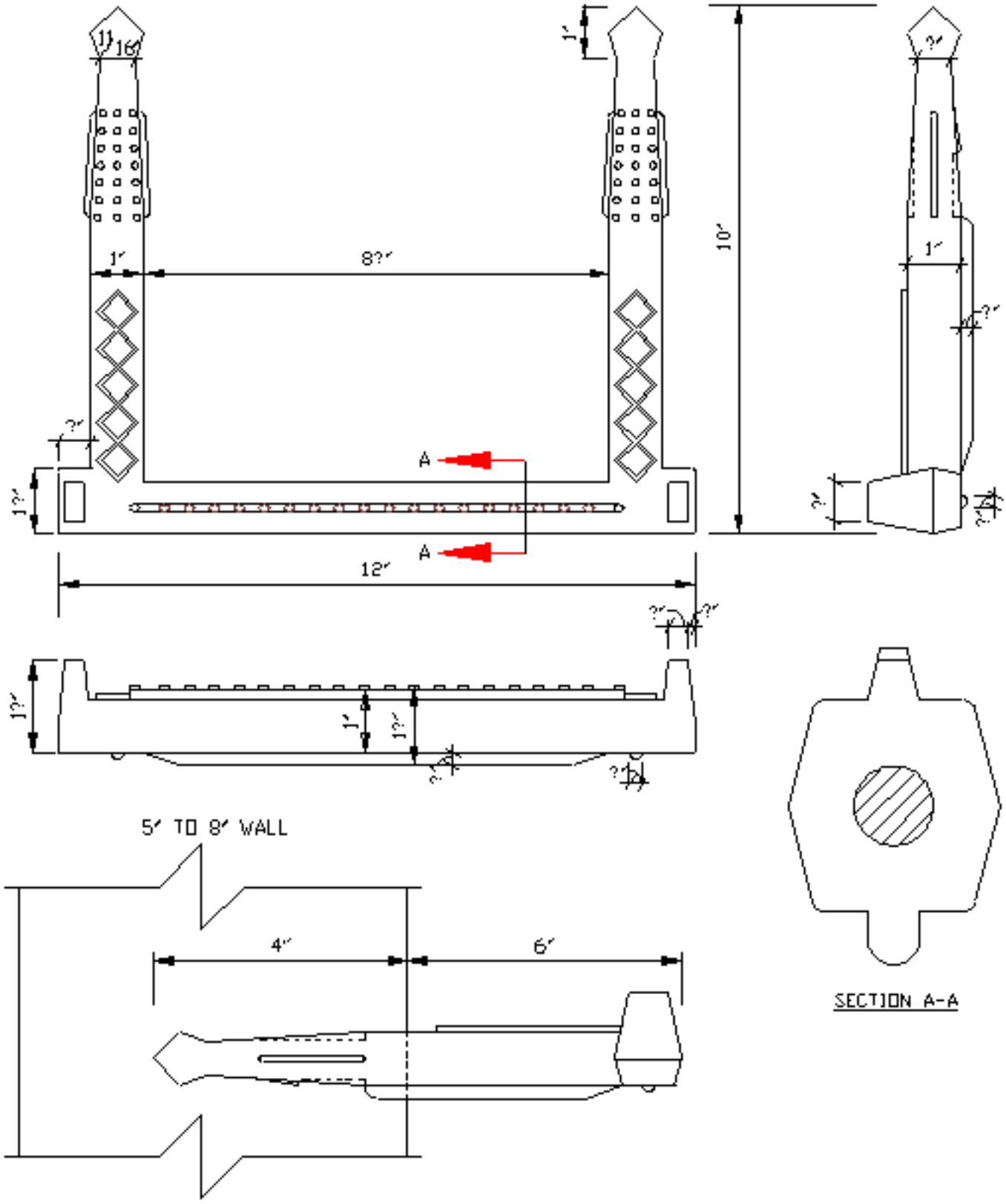

CITY OF SALISBURY, N.C. STANDARD DETAIL	DATE: JANUARY 1, 1991
SEWER SYSTEMS PLASTIC MANHOLE STEP	NOT TO SCALE
	STANDARD SS-7